DESIGNED IN THE UK

Kino Titan™

KTH150-55

Submersible Dewatering Pump

Submersible drainage pump made of cast iron for long-lasting durability. High maximum submersion depth due to double mechanical seal, resistant to high-pressure.

Suitable for civil engineering and construction works, as well as mines and quarries.

Our KT range of pumps have been designed in the UK.

Features

- Capacity: up to 192m³/h
- Head: up to 105m
- Power: 55kW
- Power supply: three-phase 400V ±10%, 50Hz
- Insulation class: F
- Protection class: IP68
- Cable length: 20m
- Water temperature: up to 40°C
- Max. water depth: 30m
- Star-Delta Starting Method

Technical Details

TYPE	OUTLET	MOTOR POWER		RATED CURRENT A	MAX HEAD	MAX CAPACITY	FREE PASS AGE	WEIGHT
	mm	kW	HP		m	m³/h	mm	kg
KTH 150 55	150	55	75	98	105	192	8	830

Performance Data

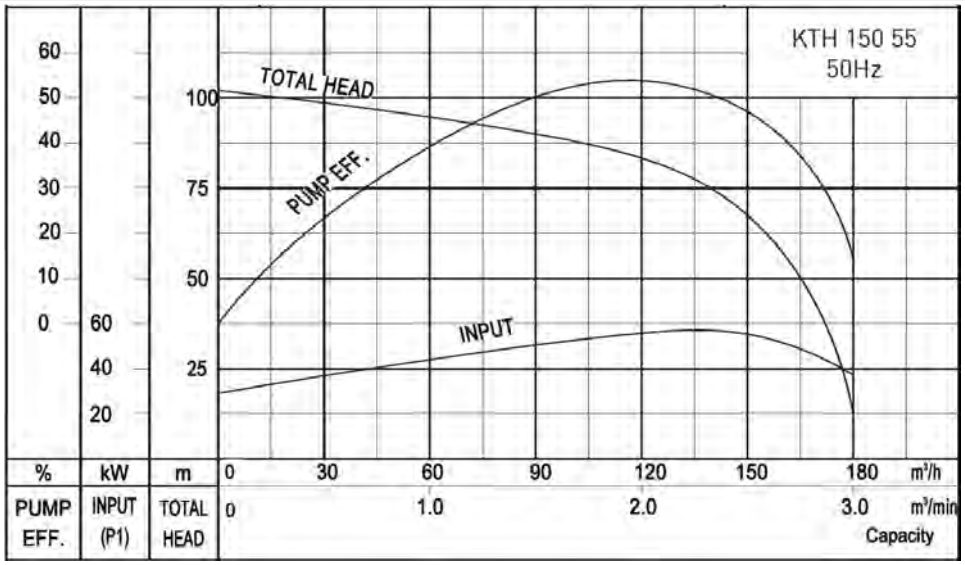

response@ttpumps.com +44 (0) 1630 647200 ttpumps.com

DESIGNED IN THE UK

Parts & Materials

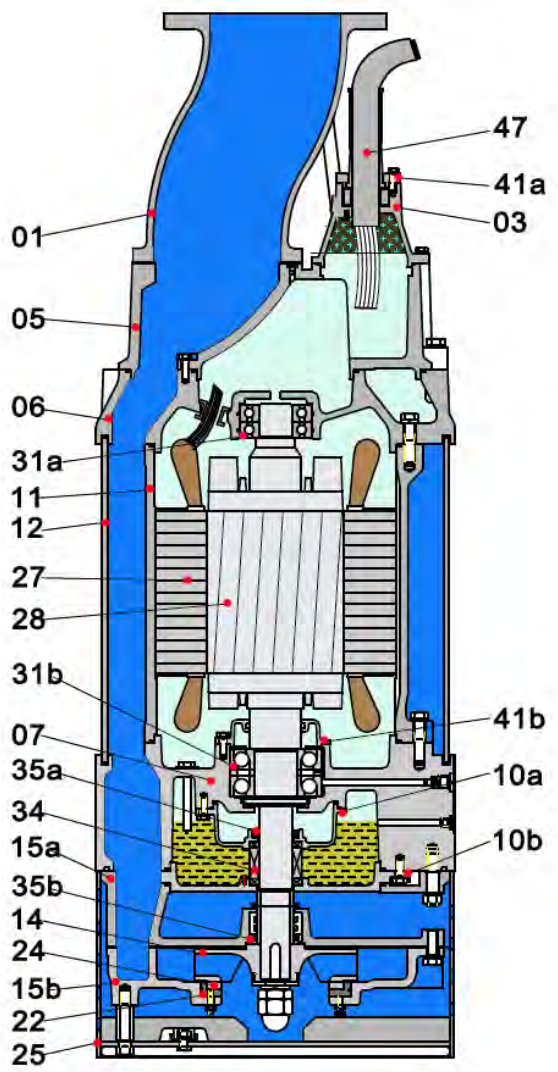

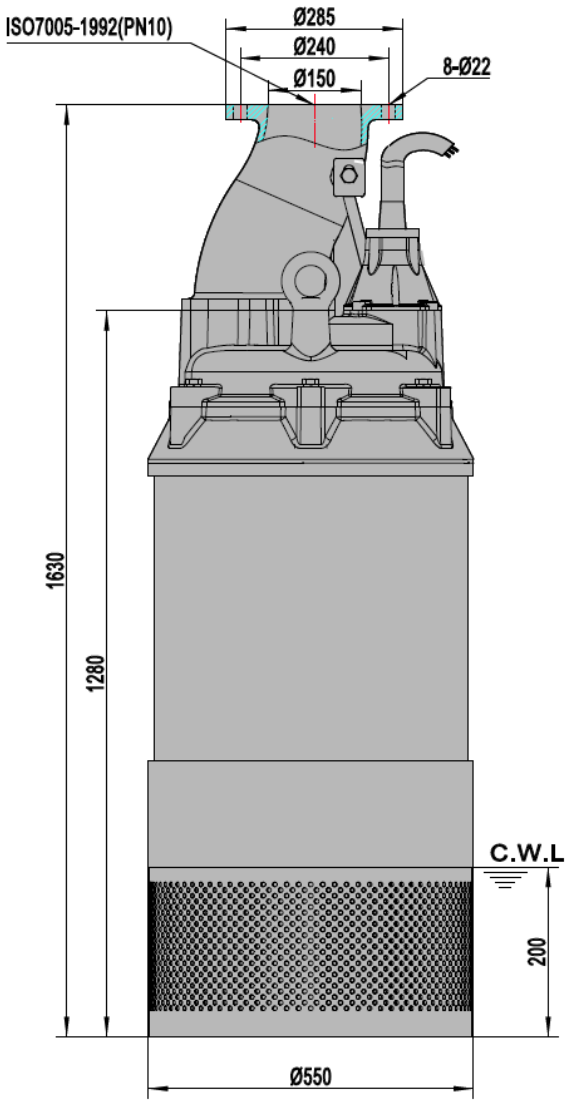

Item No.	Part name	Material	Item No.	Part name	Material
01	Hose coupling	Ductile iron	24	Neck ring	High chrome alloy
03	Terminal box	Cast iron	25	Strainer	AISI304SS
05	Upper cover	Cast iron	27	Stator	
06	Up-Bearing house	Cast iron	28	Rotor	Shaft:AISI420SS
07	Bearing house	Cast iron	31a	Bearing	Ball bearing
10a	Seal bracket	Cast iron	31b	Bearing	Angular contact bearing
10b	Seal bracket	Cast iron	34	Mechanical seal	Tc-Sic/Sic-Sic
11	Motor body	Cast iron	35a	Oil seal	
12	Outer casing	Steel	35b	Oil seal	
14	Impeller	High chrome alloy	41a	Shim	Cast iron
15a	Diffuser	Cast iron	41b	Shim	Cast iron
15b	Diffuser	Ductile iron	47	Cable	
22	Seat assembly	Cast iron			

C.W.L: Continuous Running Water Level.

response@ttpumps.com +44 (0) 1630 647200 ttpumps.com