Technical data
CMP 79

Revision no	Page:
	1

	Receiver	From
Company name		
Respons. Department		
Person in charge		
Phone number		
Fax no		
E-mail address		

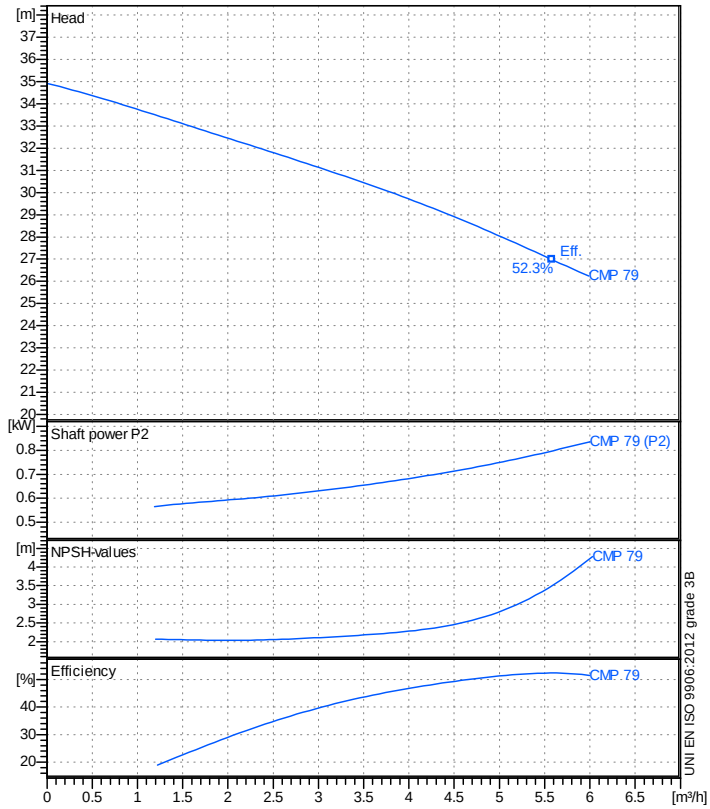

Operating data specification

Nominal flow	m³/h	0
Nominal head	m	0
Static head	m	0
NPSH - value of plant	m	0
Inlet pressure	bar	0.09793
Fluid		Water, pure
Operating temperature t A	°C	20
Density at t A	kg/dm³	0.9983
Kin. viscosity at t A	mm²/s	1.005

Pump

Pump name			CMP 79	
Size				
Design				
Speed	1/min	2850	No of stages	1
Impeller type			Single vane impeller	
Flow	Nominal		m³/h	
	Max-		m³/h	5.99
	Min-		m³/h	0
Head	Nominal		m	
	Max-		m	34.9
	Min-		m	26.2
Head H(Q=0)			m	34.9
NPSH 3%			m	
Max. working pressure			bar	3.42
Shaft power			kW	
Efficiency			%	
Max absorbed power			kW	0.83506

Materials Pump

Shaft	Stainless steel AISI 420 (1.4028)
Impeller	Thermoplastic resin
Pump body	Cast iron EN-GJL-200
Support	Aluminium
OR	NBR Rubber
Mechanical seal	BXPG (Gra/Cer/NBR)

Motor		Frame size	80		
Manufacturer / Type					
Rated power	kW	0.75	Efficiency 4/4		0 %
Electric current	A		Speed	1/min	2950
Electric voltage	V	400 V	3~	Hz	50
Starting mode		Unknown			
Degree of protection		IP 44	Insulation class		F

Dimensions in mm

a	46
DNA	G 1"
DNM	G 1"
f	254
h1	98
h2	135
n1	180
n2	140
ød	9
w	72

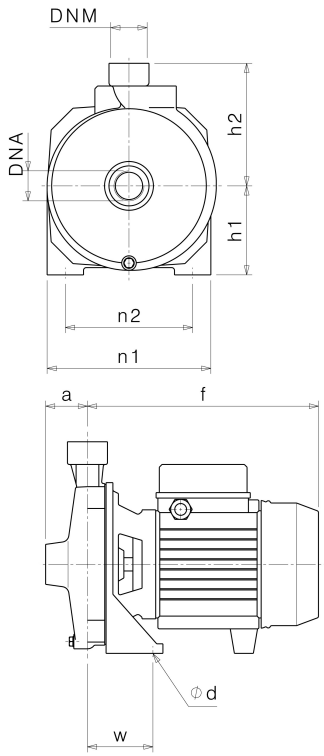

Remarks:

Project	Project ID	Created by	Created on	Last update

Performance curves
CMP 79

Revision no	Page:
	2

	Receiver	From
Company name		
Respons. Department		
Person in charge		
Phone number		
Fax no		
E-mail address		

Operating area	Flow		Head	
Operating data specification	0	m³/h	0	m
Pump data		m³/h		m

	Flow			Head		Shaft power P2		
	Min.	Max.	η Max.	H(Q=0)	η Max.	P2(Q=0)	Max.	η Max.
	m³/h	m³/h	m³/h	m	m	kW	kW	kW
	0	5.99	5.58	34.9	27		0.835	0.797

Impeller type	Single vane impeller	
Impeller construction		
Sense of rotation	Clockwise from the drive end	
Outlet width	G1"	
Speed	1/min	2850
Frequency	Hz	50 Hz

Performance data based to: Water, pure [100%] ; 20°C; 0.998kg/dm³; 1mm²/s

UNI EN ISO 9906:2012 - Grade 3B

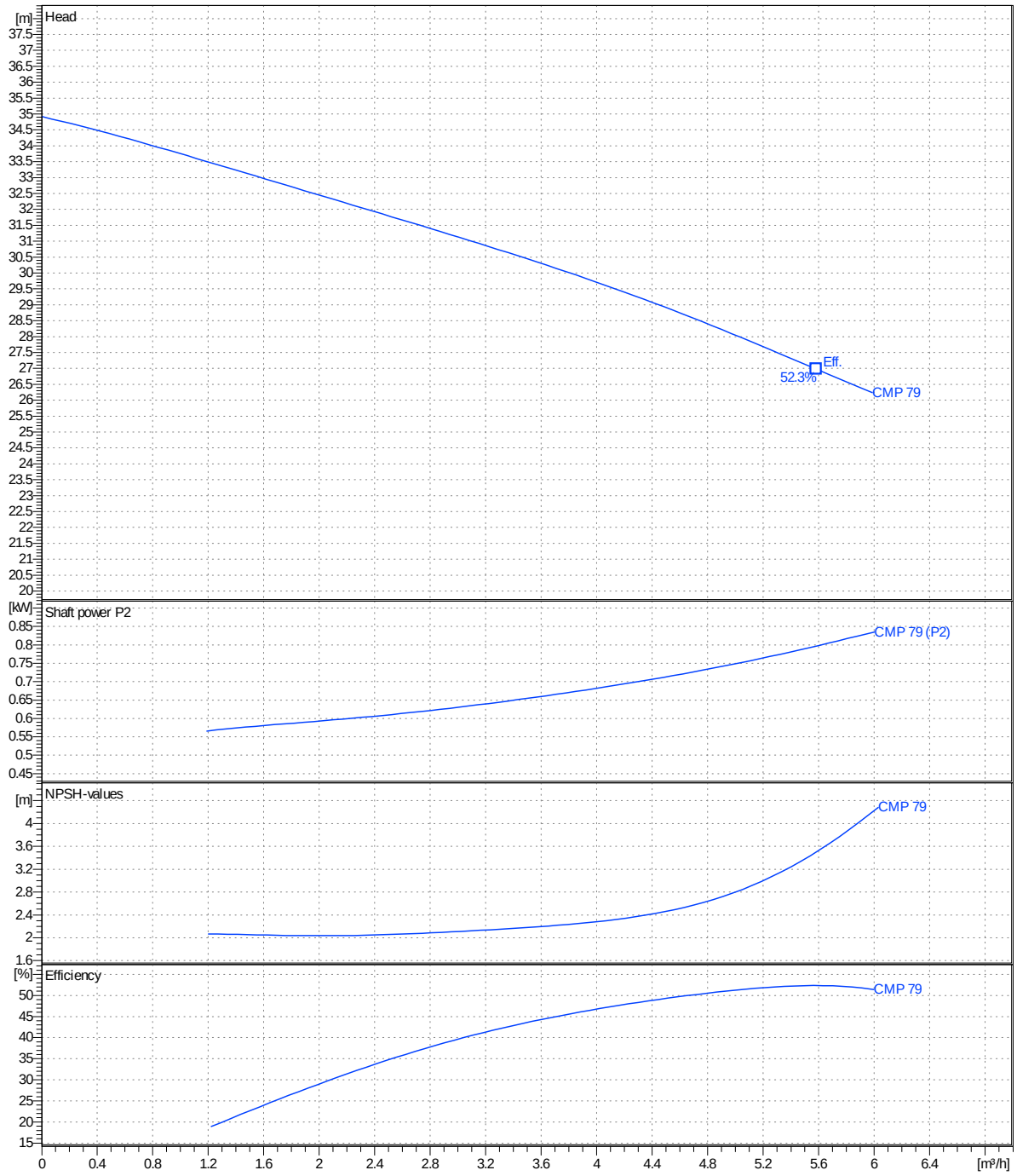

Project	Project ID	Created by	Created on	Last update