Data sheet 50PUA2.4-52

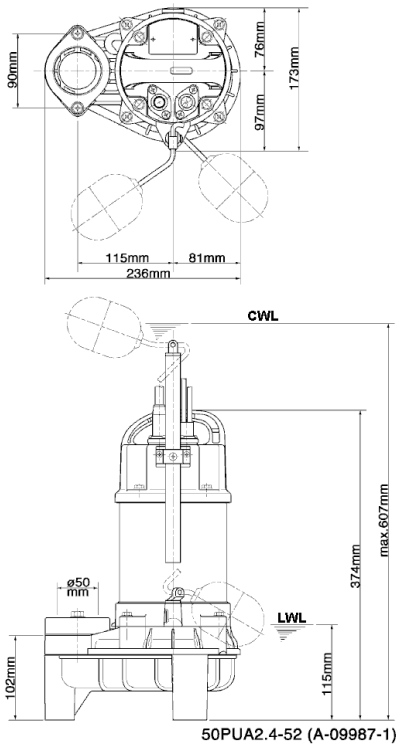

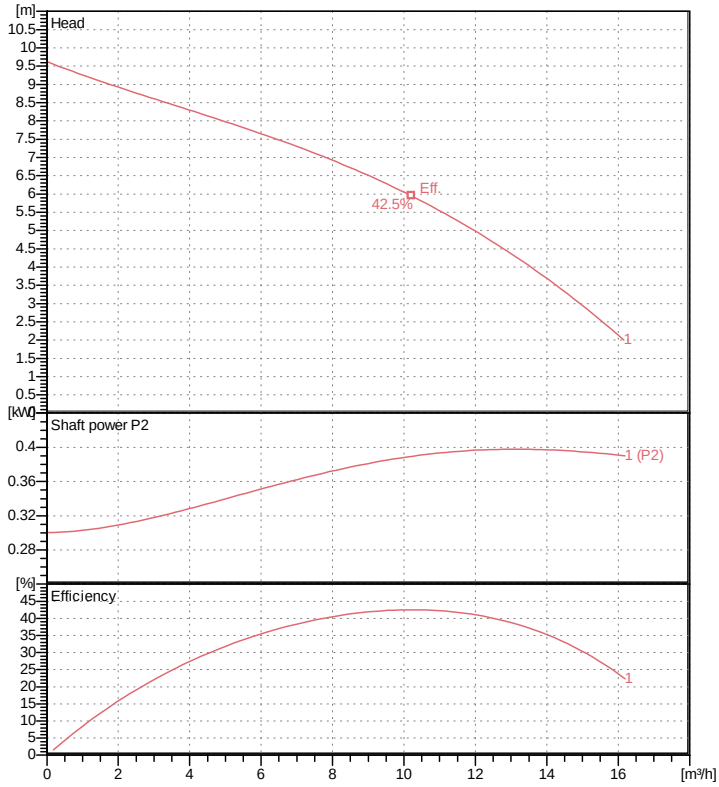

CWL: Continuous running water level
LWL: Lowest running water level

Specification

Electric submersible pump

Degree of protection	IP 68
Depth of submersion	max. 20 m
Type of impeller	Vortex impeller
Free passage	35 mm

Suitable for:
sewage water, waste water, various waste water

Electric motor

Dry-type submersible induction motor

Insulation class E	2Poles 2833 1/min
Starting mode	Directly
Rated voltage	400 V 50 Hz 3~
Power uptake	0.58 kW
Rated power	0.40 kW
Rated current	1.2 A
Start current	5.0 A

Cable

10m H07RN-F 4Cx1,5mm²

Motor Protection

Circle thermal protector
(snap-action bi-metal device)

Shaft seal

Double inside mechanical seal in oil bath
additional lubrication by oil lifting device

Primary seal
Silicon carbide on ceramic
Secondary seal
Ceramic on carbon

Bearings

Shielded ball bearings, maintenance-free

Materials

Impeller	PPO-GF20
Pump casing	ABS-GF20
Motor Frame	Stainless steel SUS304
Shaft	Stainless steel SUS304

Discharge size

50mm screwed-in mating flange

Weight

7.5 kg (dry weight of the pump only without cable)

Heltorfer Str. 14 * 40472 Düsseldorf * Germany
Tel.: +49-211-4179373 sales@tsurumi.eu
Fax: +49-211-4791429 www.tsurumi.eu

Performance curve
50PUA2.4-52

Discharge port	2"
Head	9.6 m
Flow	16.2 m³/h
Rated power	0.40 kW
Power input	0.58 kW
Phases	3~
Voltages	400 V
Frequency	50 Hz
Rated current	1.2 A
Starting current	5.00 A
Number of poles	2
Speed	2833 1/min
Starting mode	Directly
Insulation class	E

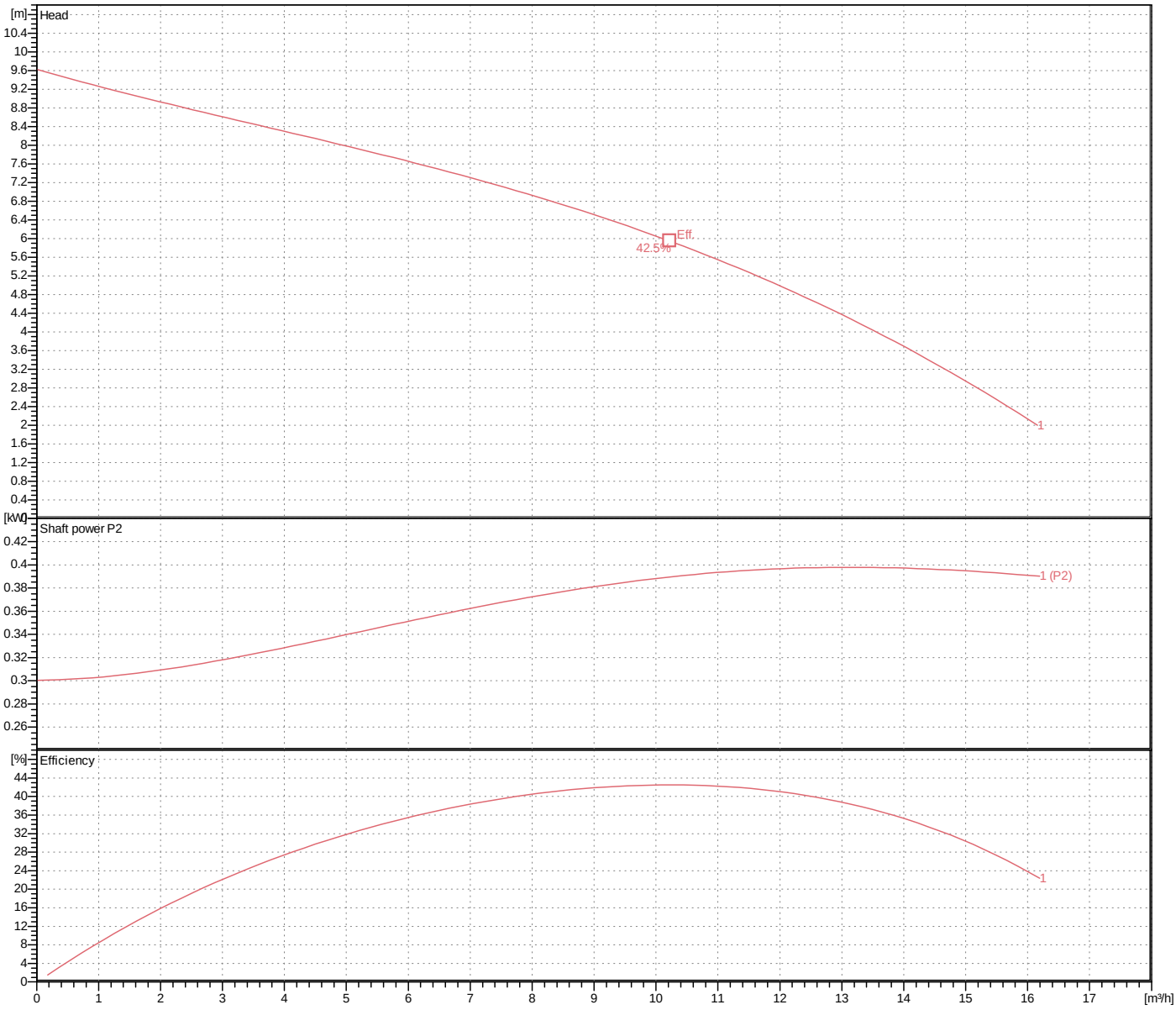

TSURUMI PUMP

Tsurumi Europe GmbH
15.11.2011

Heltorfer Str. 14 * 40472 Düsseldorf * Germany
Tel.: +49-211-4179373 sales@tsurumi.eu
Fax: +49-211-4791429 www.tsurumi.eu

Dimensions
50PUA2.4-52

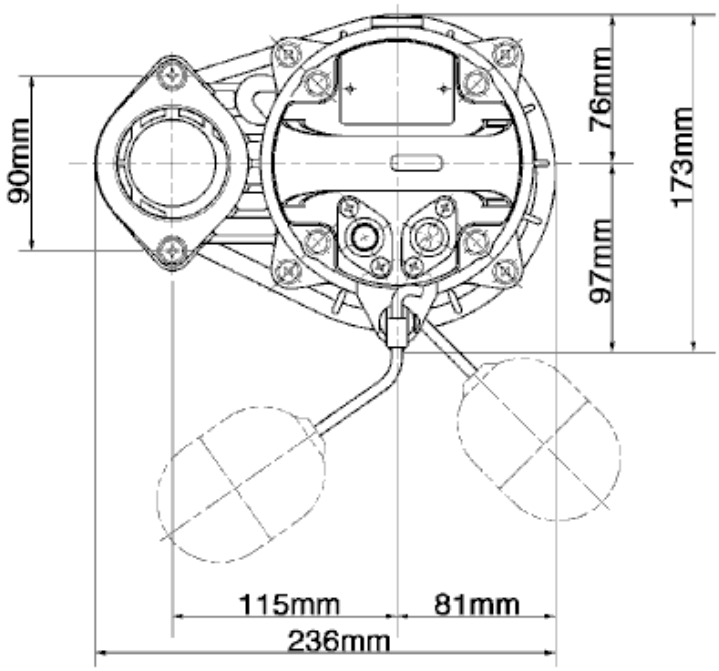

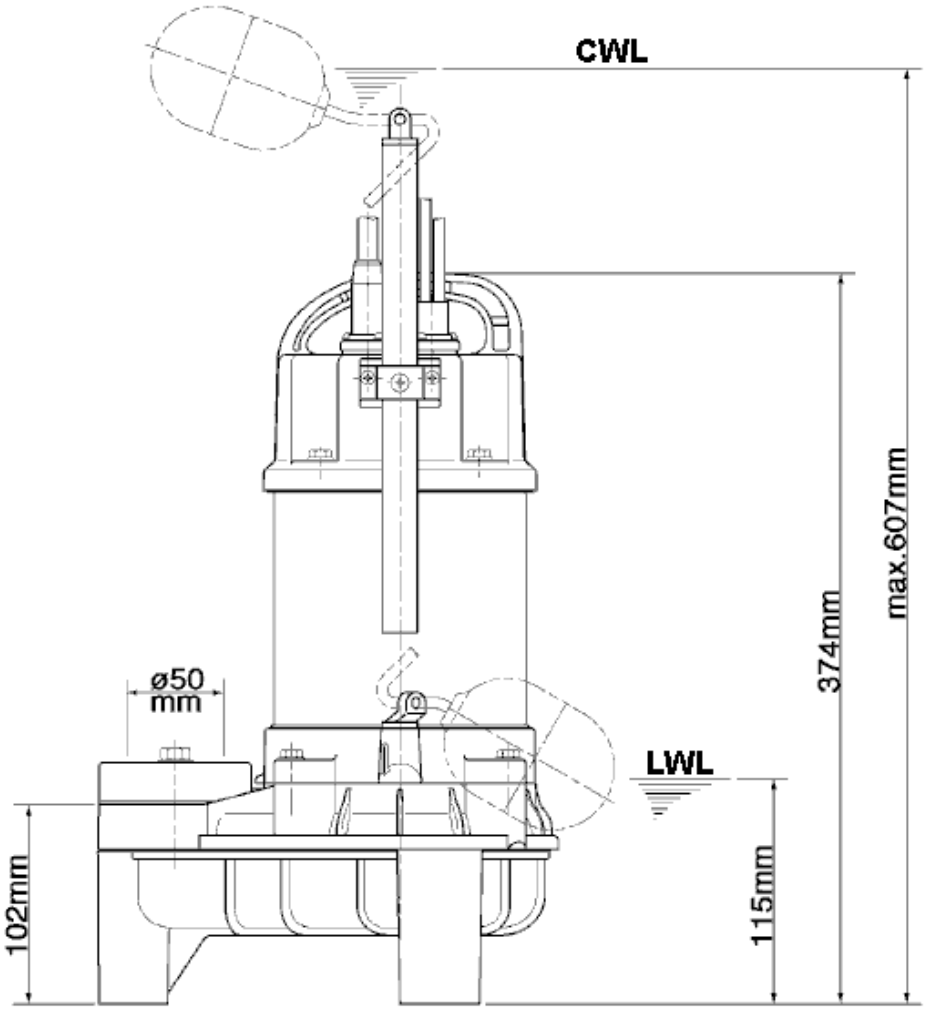

50PUA2.4-52 (A-09987-1)

CWL: Continuous running water level
LWL: Lowest running water level

TSURUMI PUMP

Tsurumi Europe GmbH
15.11.2011

Heltorfer Str. 14 * 40472 Düsseldorf * Germany
Tel.: +49-211-4179373 sales@tsurumi.eu
Fax: +49-211-4791429 www.tsurumi.eu

Sectional drawing
50PUA2.4-52

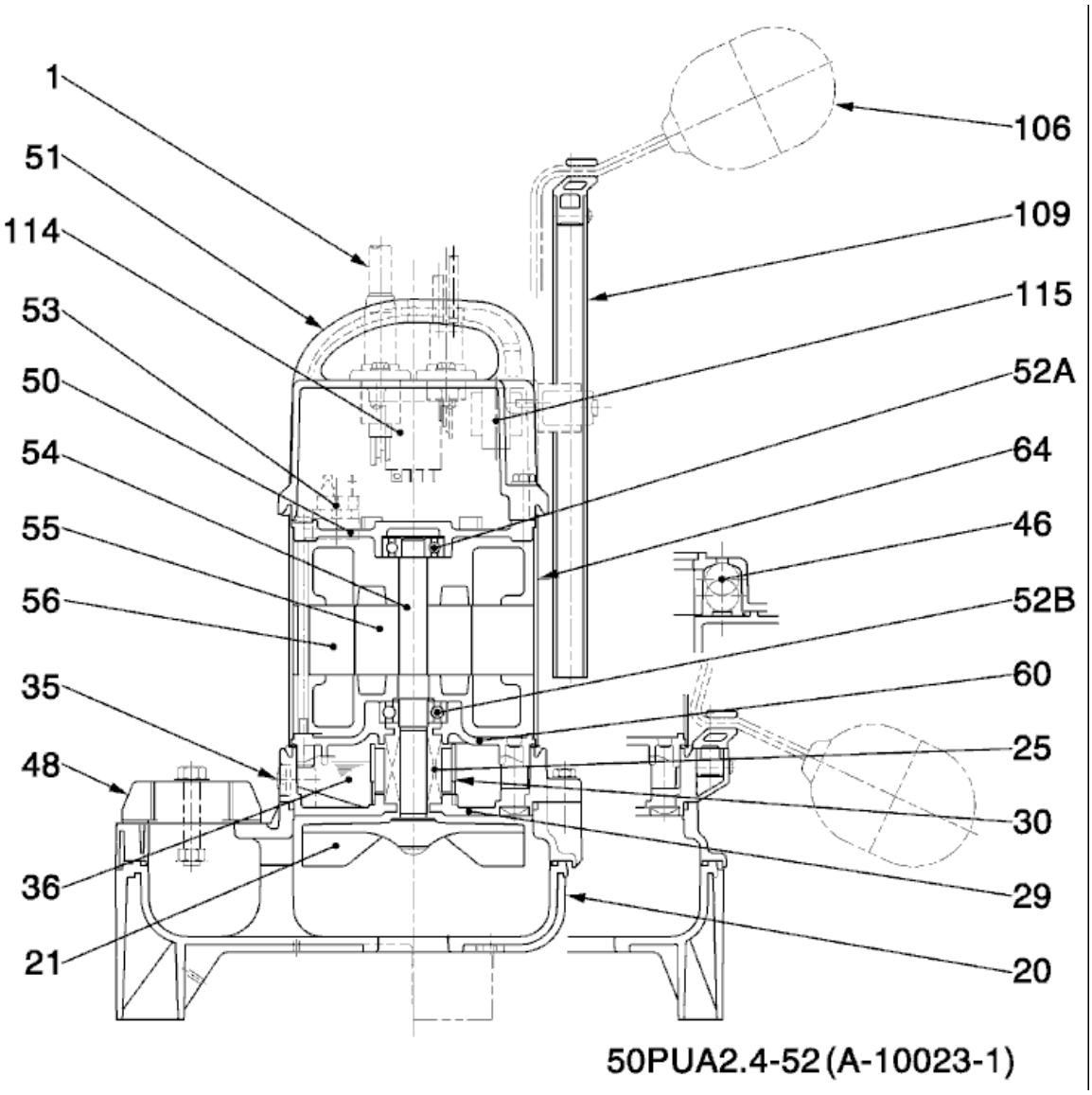

No.	Denomination	Remark	No.	Denomination	Remark
1	Cable	H07RN-F	55	Rotor	.
20	Pump casing	ABS-GF20	56	Stator	.
21	Impeller	PPO-GF20	60	Bearing Housing	Aluminium die casting
25	Mechanical seal	W-14HL	64	Motor Frame	Stainless steel SUS304
29	Oil casing	PPS-(GF+MD)50	106	Float switch (2x)	ABS
30	Oil distributor	Plastic	109	Support	PVC
35	Oil screw	Stainless steel SUS304	114	Relais	.
36	Lubricant	Turbine oil (ISO VG32)	115	Transformator	.
46	Air vent valve	Glasskugel			
48	Screwed Flange	PC(PBT-GF30)			
50	Motor cover	Steel plate			
51	Main cover	PPS-GF40			
52A	Upper bearing	6201ZZC3			
52B	Lower bearing	6202ZZC3			
53	Motor Protector	.			
54	Shaft	Stainless steel SUS304			

Heltorfer Str. 14 * 40472 Düsseldorf * Germany
Tel.: +49-211-4179373 sales@tsurumi.eu
Fax: +49-211-4791429 www.tsurumi.eu