Data sheet

DGF 150/2/G50H A1CT5

F series

Technical specification

3~ 50 Hz

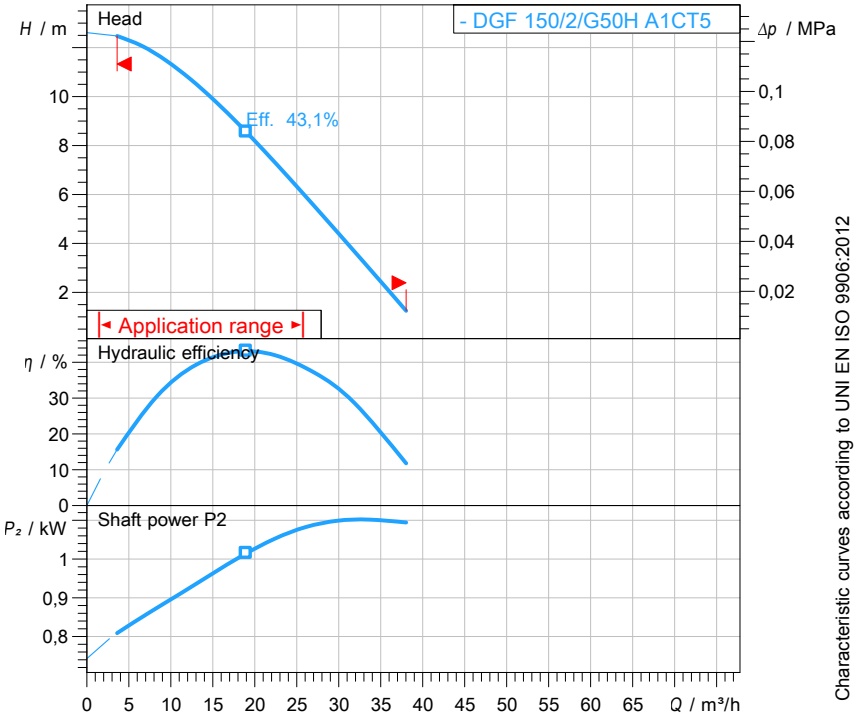

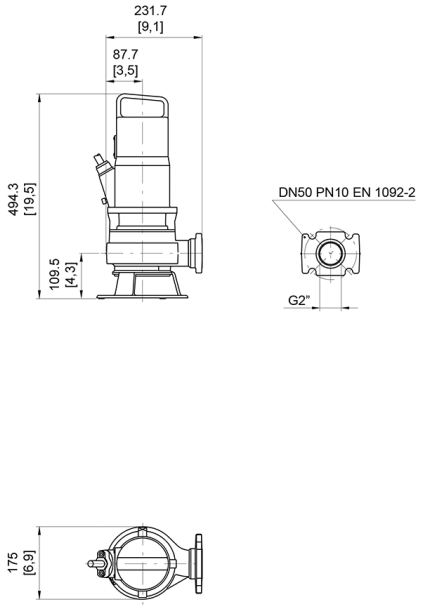

[mm [inch]]

Pump

Series	F series
Pump name	DGF 150/2/G50H A1CT5
Configuration	NGTAB51040N00EX
Standard	ATEX 94/9/CE
ATEX mark	II 2 GD Ex db k IIB T4 Ex tb IIIC T135°C IP68

Motor data

Rated voltage	400 V
Frequency	50 Hz
Motor phases	3~
Number of poles	2
Rated power P2	1,10 kW
Incoming power P1	1,53 kW
Rated current	2,9 A
rpm	2850 1/min
cos φ	0,76
Rated torque	3,7 Nm
Start	Direct starting
Degree of protection	IP 68
Insulation class	H

Hydraulic

Type	DG (Set-back Vortex)
Free passage	50 mm
Impeller type	Set-back Vortex impeller
Max. hydraulic efficiency	43,1 %
Suction	
Discharge	DN 50 - G2" EN 1092-2
Curve tolerance	UNI EN ISO 9906:2012

Operating limits (standard pumps)

Max. ambient temperature	40 °C
Max. density treated liquid	1100 kg/m³
Max. immersion depth	30 m
pH treated liquid	6 ÷ 14
Max. start per hour (equally distributed)	20
Wet/dry use	WET
Max. acoustic pressure level	70 dB
Operating mode	S1 - Continuous use

Construction materials

Case	Cast iron EN-GJL 250
Shaft	Stainless steel - AISI 420
Hydraulic	Cast iron - EN-GJL 250
Impeller	Cast iron - EN-GJL 250
Painting/Coating	Bi-epoxy 150 µm
Screws	Stainless steel - Class A2-70
Gaskets	VITON
Foot base (if present)	Cast iron - EN-GJS 600

Construction features

Cooling system	No cooling jacket
Main cable	4G1.5 + 2x0.75
Control cable	-
Cable length	10 mt
Mechanical seals	2 in silicon carbide (2SiC)
Additional drilling	-
Weight*	31 kg
Electrical variant	Thermal protection

*** cable's weight not included**

Rev. 0 - 16-12-2014

All data shown are not binding. Zenit reserves the right to change data and dimensions without notice.

Created or 2017-10-11

Pump performance curves

3~ 50 Hz

Hydraulic type	Impeller type	Free passage	Discharge	Suction
DG (Set-back Vortex)	Set-back Vortex impeller	50 mm	DN 50 - G2"	

DUTY POINT					
Flow	Head	Shaft power P2	Hydraulic efficiency	Density	Viscosity
				998,3 kg/m³	1,005 mm²/s

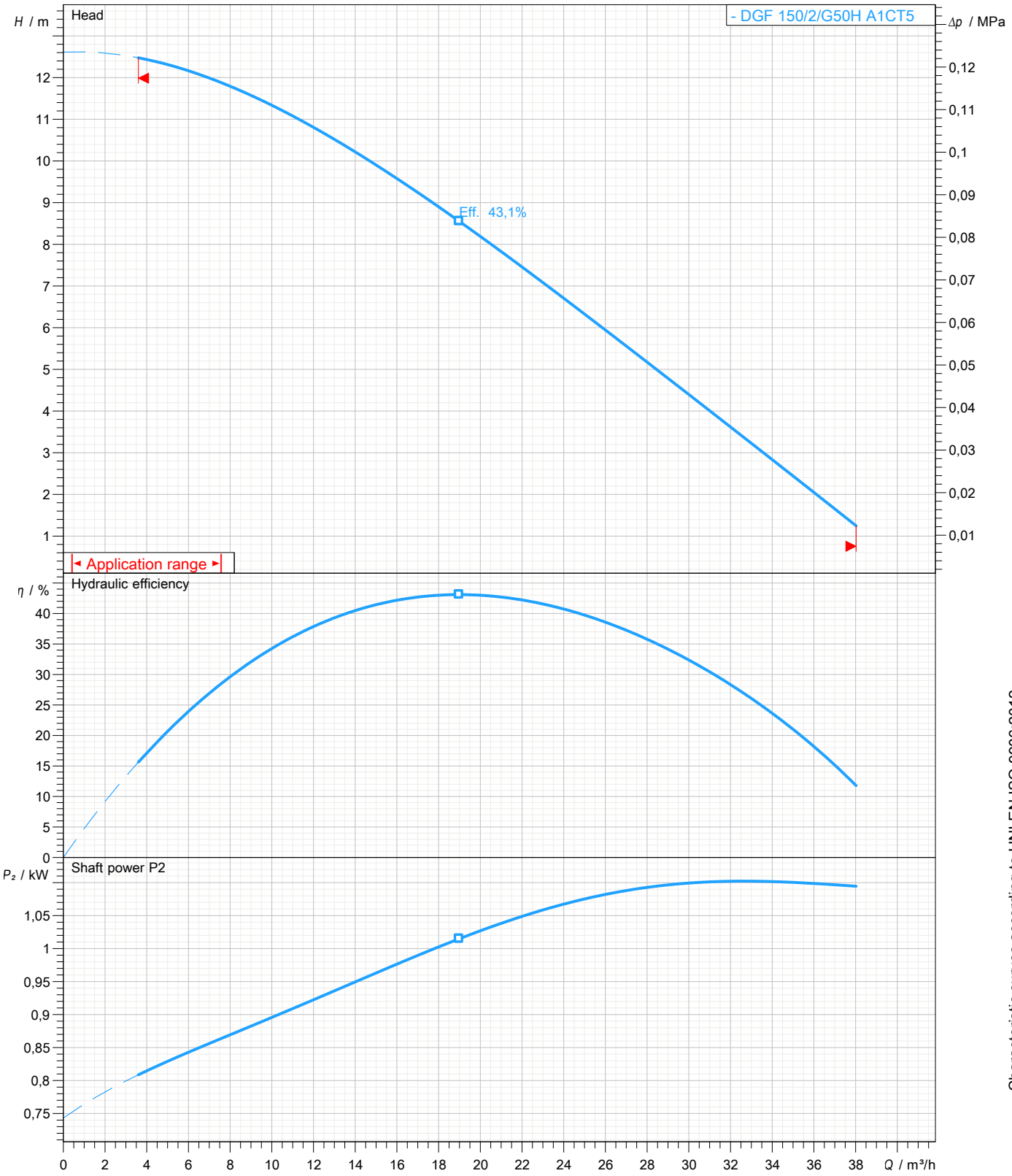

Characteristic curves according to UNI EN ISO 9906:2012

Dimensional drawing

3~ 50 Hz

Installation type Installation with bottom coupling device - Vertical outlet + GTP

WET/DRY use: WET

Discharge: DN 50 - G2" EN 1092-2 Suction:

Pressure rating (suction/discharge): PN 10

Accessory * : DAC 32-50/G50V-G65V 3/4" EN+GTP (P) Accessory code * : 9028.002

*** Accessory must be ordered separately**

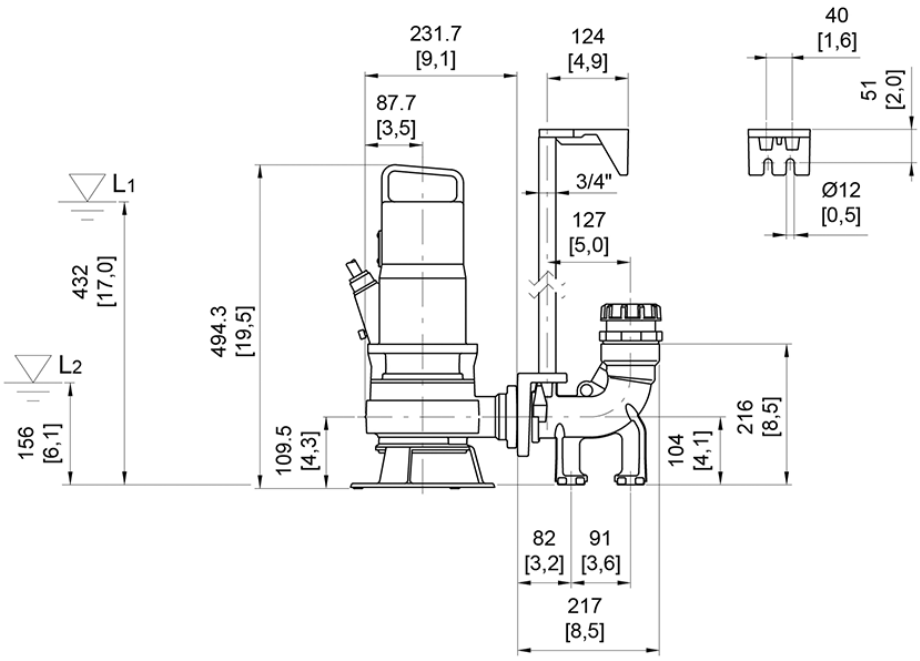

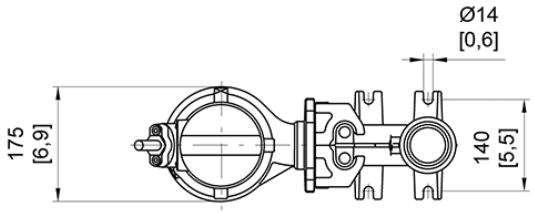

L1: Minimum operating level for continuous use

L2: Minimum operating level for discontinuous use

[mm [inch]]

All data shown are not binding. Zenit reserves the right to change data and dimensions without notice.