Data sheet KTV3-55

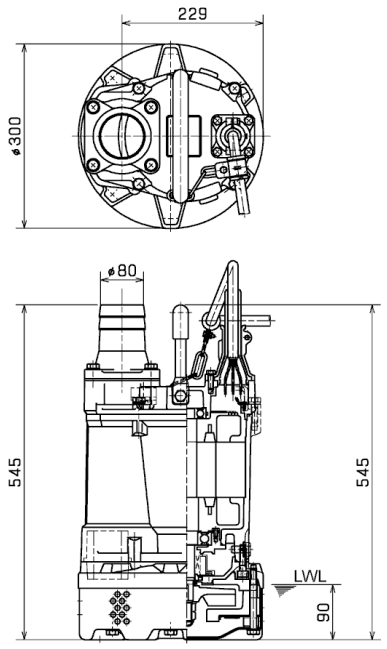

mm KTV3-55

CWL: Continuous running water level

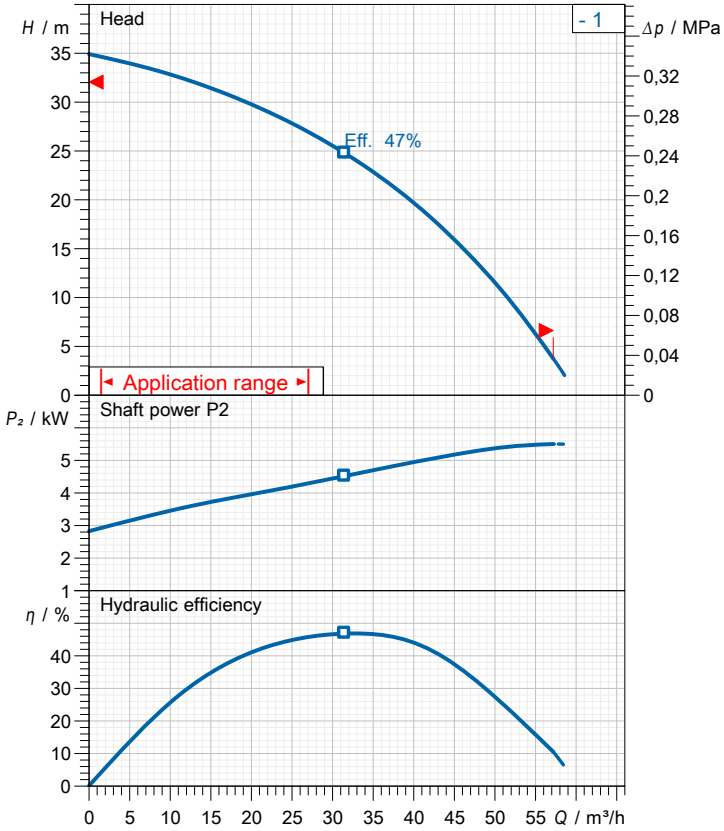

Specification

Elektrische Tauchpumpe KTV-Serie

Degree of protection	IP 68
Pressure resistance	max. 25 m
Type of impeller	semi-vortex
Max. solid handling	8,5 mm

Suitable for:
rain water, ground water, sand water

Electric motor

Dry-type submersible induction motor

Insulation class	E	2Poles	2870 1/min
Starting mode	Direct starting		
Rated voltage	400 V	50 Hz	3~
Power uptake	7,06 kW		
Rated power	5,50 kW		
Rated current	11 A		
Start current	65,0 A		

Cable

20m NSSHÖU 4Cx2,5mm²

Motor Protection

Circle thermal protector
(snap-action bi-metal device)

Shaft seal

Double inside mechanical seal in oil bath
additional lubrication by oil lifting device

Primary seal
Silicon carbide on silicon carbide

Secondary seal
Silicon carbide on silicon carbide

Bearings

Shielded ball bearings, maintenance-free

Materials

Impeller	FCD700 (EN-GJS-700-2)
Pump casing	BR + Natural Rubber
Motor Frame	Aluminium die casting
Shaft	SUS403 (EN-X6Cr13)

Discharge size

3" (80mm) BS-coupling (threaded flange)

Weight

47 kg (dry weight of the pump only without cable)

Wahlerstr. 10 * 40472 Düsseldorf * Germany
Tel.: +49-211-4179373 sales@tsurumi.eu
Fax: +49-211-417937-480 www.tsurumi.eu

Performance curve
KTV3-55

Discharge port	3"
FördH	34,9 m
Flow	57,2 m³/h
Rated power	5,50 kW
Power input	7,06 kW
Phases	3~
Voltages	400 V
Frequency	50 Hz
Rated current	11 A
Starting current	65,01 A
Number of poles	2
Speed	2870 1/min
Starting mode	Direct starting
Insulation class	E

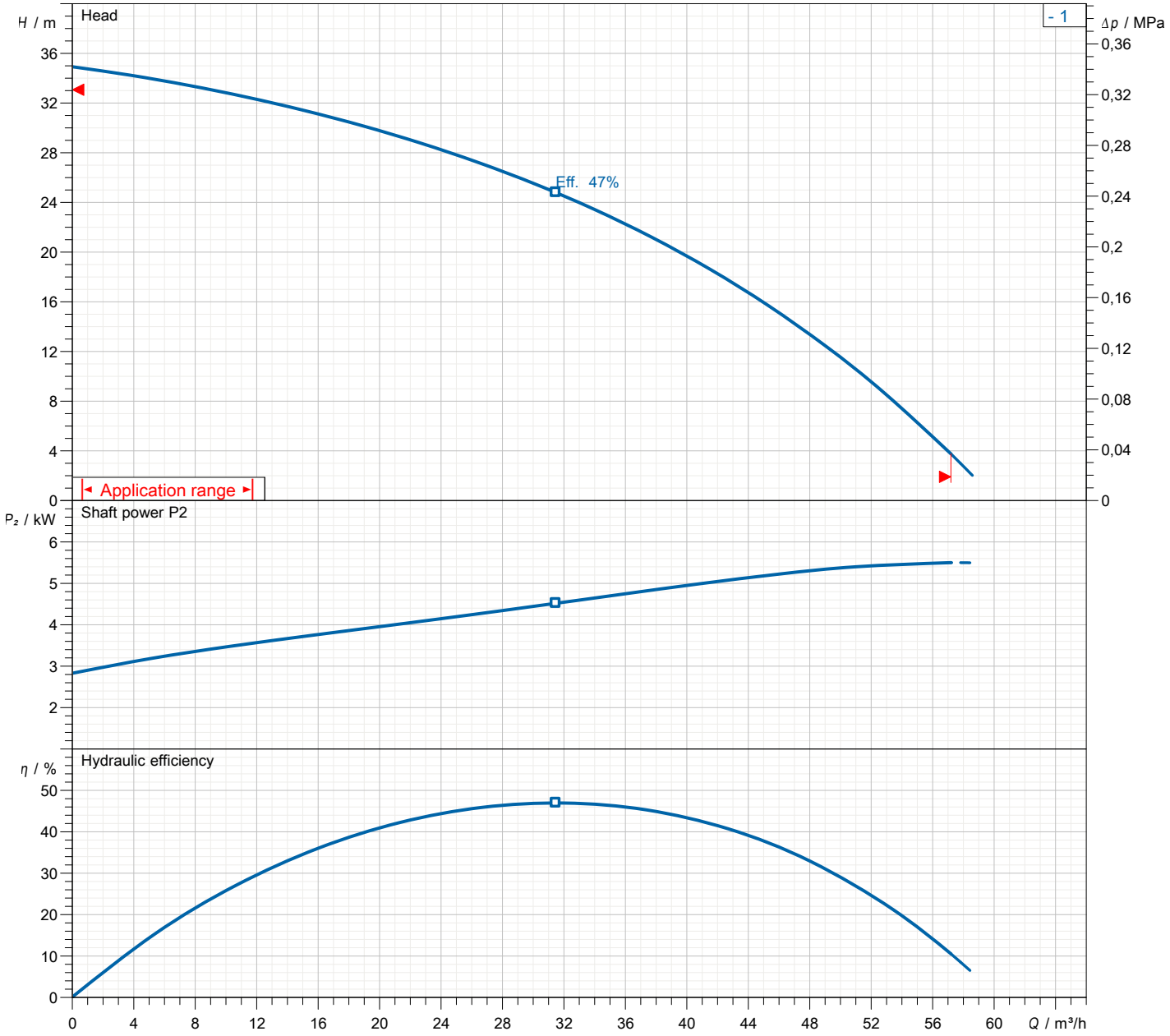

TSURUMI PUMP
Tsurumi Europe GmbH
04.06.2018 V.20 / 1.11.2017
Wahlerstr. 10 * 40472 Düsseldorf * Germany
Tel.: +49-211-4179373 sales@tsurumi.eu
Fax: +49-211-417937-480 www.tsurumi.eu

Dimensions
KTV3-55

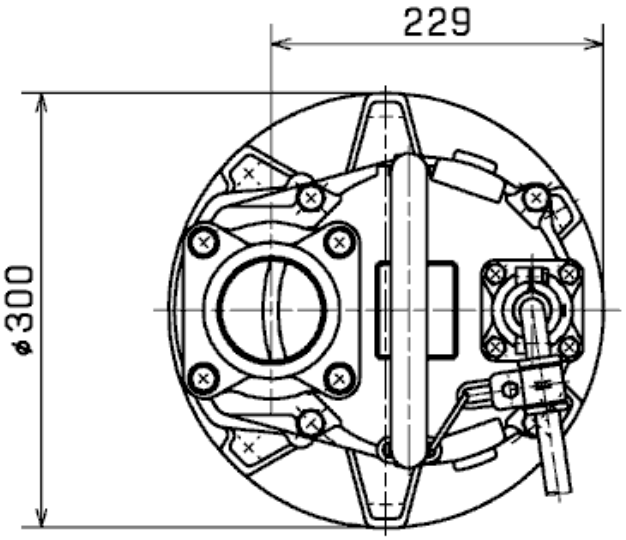

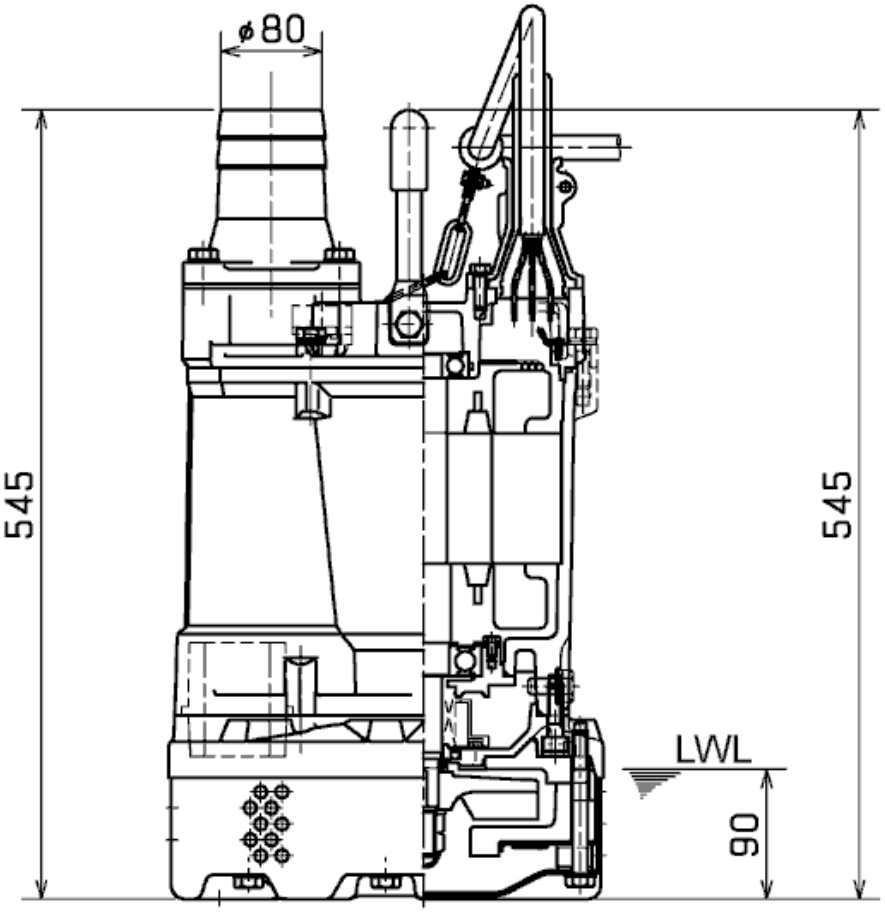

mm **KTV3-55**

CWL: Continuous running water level
LWL: Lowest running water level

Wahlerstr. 10 * 40472 Düsseldorf * Germany
Tel.: +49-211-4179373 sales@tsurumi.eu
Fax: +49-211-417937-480 www.tsurumi.eu

Sectional drawing
KTV3-55

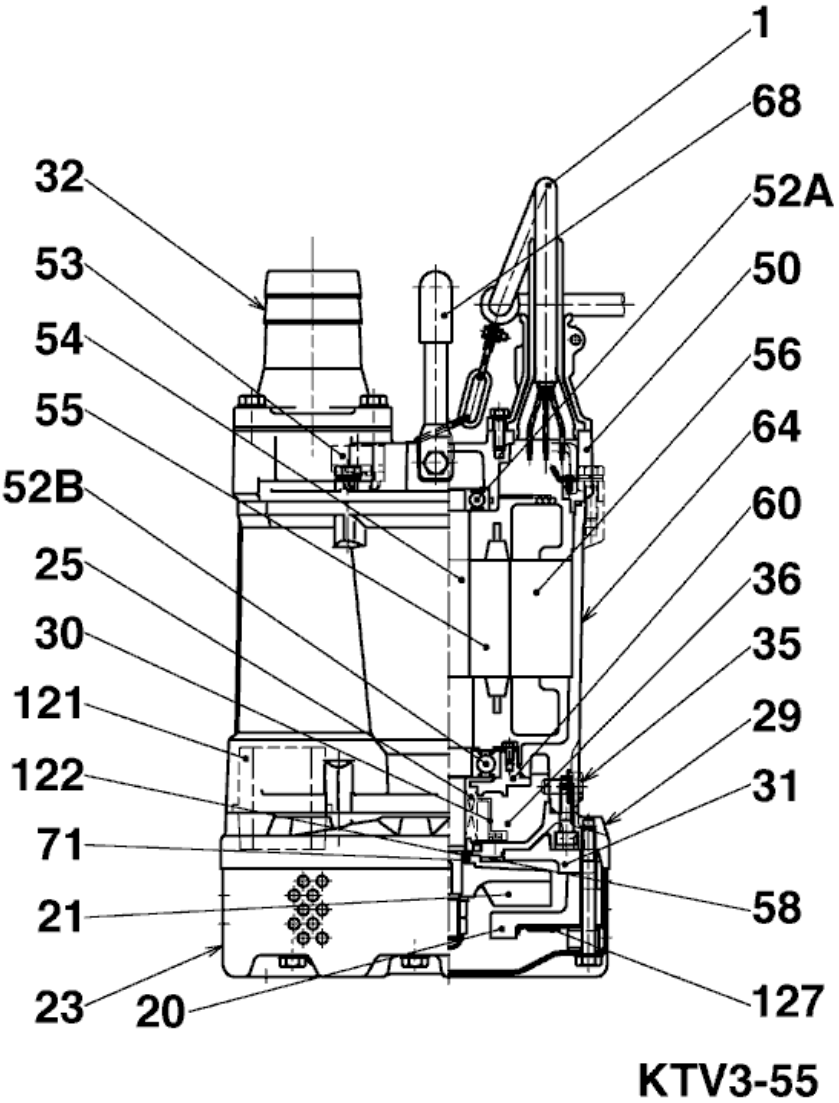

No.	Description	Remark	No.	Description	Remark
1	Cable	20m NSSHÖU	55	Rotor	.
20	Pump casing	BR + Natural Rubber	56	Stator	.
21	Impeller	FCD700 (EN-GJS-700-2)	58	Clear-view screen	SUS304 (EN-X5CrNi18-10)
23	Strainer	Steel plate	60	Bearing Housing	Aluminium die casting
25	Mechanical seal	H-25T	64	Motor Frame	Aluminium die casting
29	Oil casing	Aluminium die casting	68	Handle	SGP + NBR
30	Oil distributor	Plastic	71	Shaft protection sleeve	SUS304 (EN-X5CrNi18-10)
31	Wear protection	BR	121	Seal	SBR
32	Discharge coupling	Aluminium die casting	122	V-ring	Nitrile Rubber
35	Oil screw	SUS304 (EN-X5CrNi18-10)	127	Pressure plate	Steel plate
36	Lubricant	Turbine oil (ISO VG32)			
50	Main cover	Aluminium die casting			
52A	Upper bearing	6305ZZC3			
52B	Lower bearing	6307ZZC3			
53	Motor Protector 380/400/415V-50Hz	KA314-HRXL00 (H.C)			
54	Shaft	SUS403 (EN-X6Cr13)			

Wahlerstr. 10 * 40472 Düsseldorf * Germany
Tel.: +49-211-4179373 sales@tsurumi.eu
Fax: +49-211-417937-480 www.tsurumi.eu